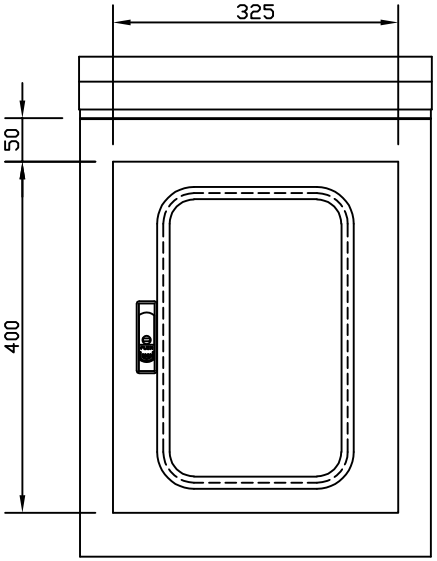

IN DOOR

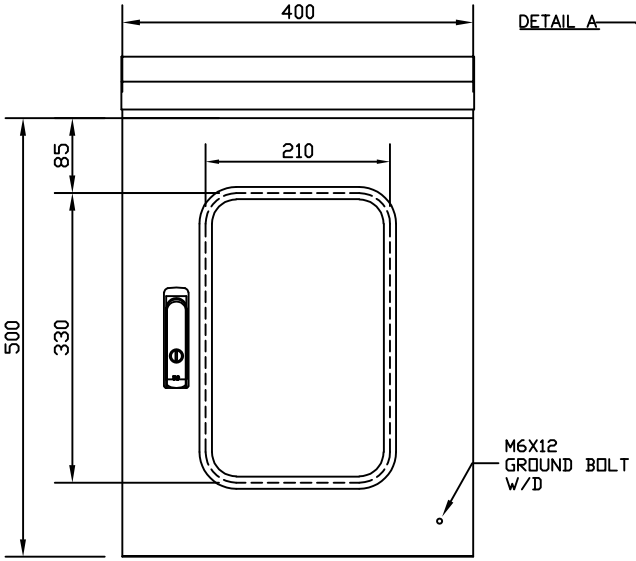

FRONT

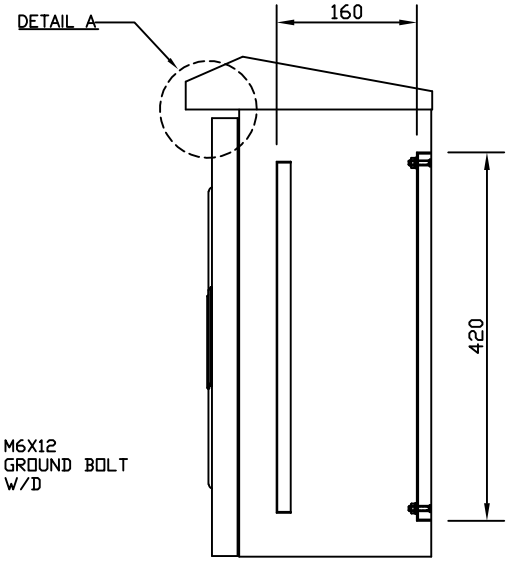

RIGHT

* NOTE *

1.MODEL WS 40.50.25

2.형식 옥외방수이중문

3.재질 SUS 1.2T

4.규격 400*500*250
지붕높이 제외

5.속판 GI 1.6T

6.전면 PC창

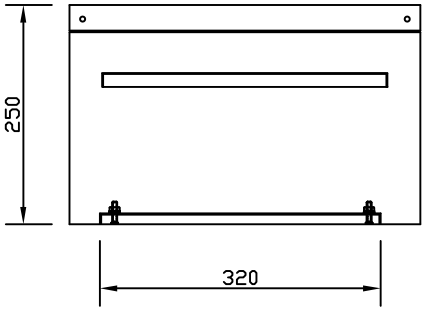

BOTTOM

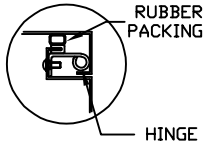

DETAIL A

REV.	DATE	DESCRIPTION	DWG	CHK'D	APP'D
△	2022.01.19		AHN S Y	KIM H R	KIM H R

우리박스

PROJECT	옥외방수이중문
TITLE	WS 40.50.25

UNIT	SCALE	DRAWING NO	REV.
■ mm □ INCH	NONE		△

A4 297x210 mm